LoRaServer

Orne Brocaar - www.loraserver.io

Orne Brocaar

- Freelance software engineer
- Usually joining teams / companies on project base
  - LoRa Server side-project (started end 2015)
- Now fulltime on LoRa Server (all open-source)

What is LoRaWAN?

- Radio modulation: LoRa
- Protocol: LoRaWAN

- Low power (years on a battery)
- Long Range (kilometers)
- Low data-rate (bytes)
- License-free band

How does it work?

- Device wakes up sends a message & back to sleep
- One or multiple nearby gateways receive data & forward
- Network server authenticates the message & forward to AS
- Application-server decrypts [and enqueues downlink frames]
  - RX1 & RX2

- Important: a device is not “connected” to a gateway!

How it started

(beginning 2016 open-sourced)

www.thethingsnetwork.org/forum/t/alternative-lorawan-network-server-loraserver-io/1485

Alternative LoRaWAN network-server: loraserver.io

Network and Routing Backend

LoRa Server

localhost:8000/#/nodes

LoRa Server Applications Nodes

Nodes

DevEUI	AppEUI	Actions
0807060504030201	0102030	Session / ABP Edit Delete

Create node

Node session for 0807060504030201

DevAddr: generate

07954ddb

AppSKey:

01010101010101010101010101010101

NwkSKey:

02020202020202020202020202020202

FCnt (up):

0

FCnt (down):

0

DevEUI:

0807060504030201

AppEUI:

0102030405060708

Close Save changes

Screen Shot 2016-03-13 at 11.30.58.png · 1372x897 72.7 KB · download

loraserver:

The LoRaWAN network-server which at one end communicates with the lora-semtech-bridge (MQTT) and at the other end communicates with the application (MQTT). The latter communication is (currently) serialised in JSON format (data is in base64, more fields will be added like signal strength etc...). Example:


```
{"devEUI":"0101010101010101","ack":false,"fPort":1,"gatewayCount":1,"data":"aGVsb
```


Display a menu

Today used worldwide!

(10k+ downloads last 90 days)

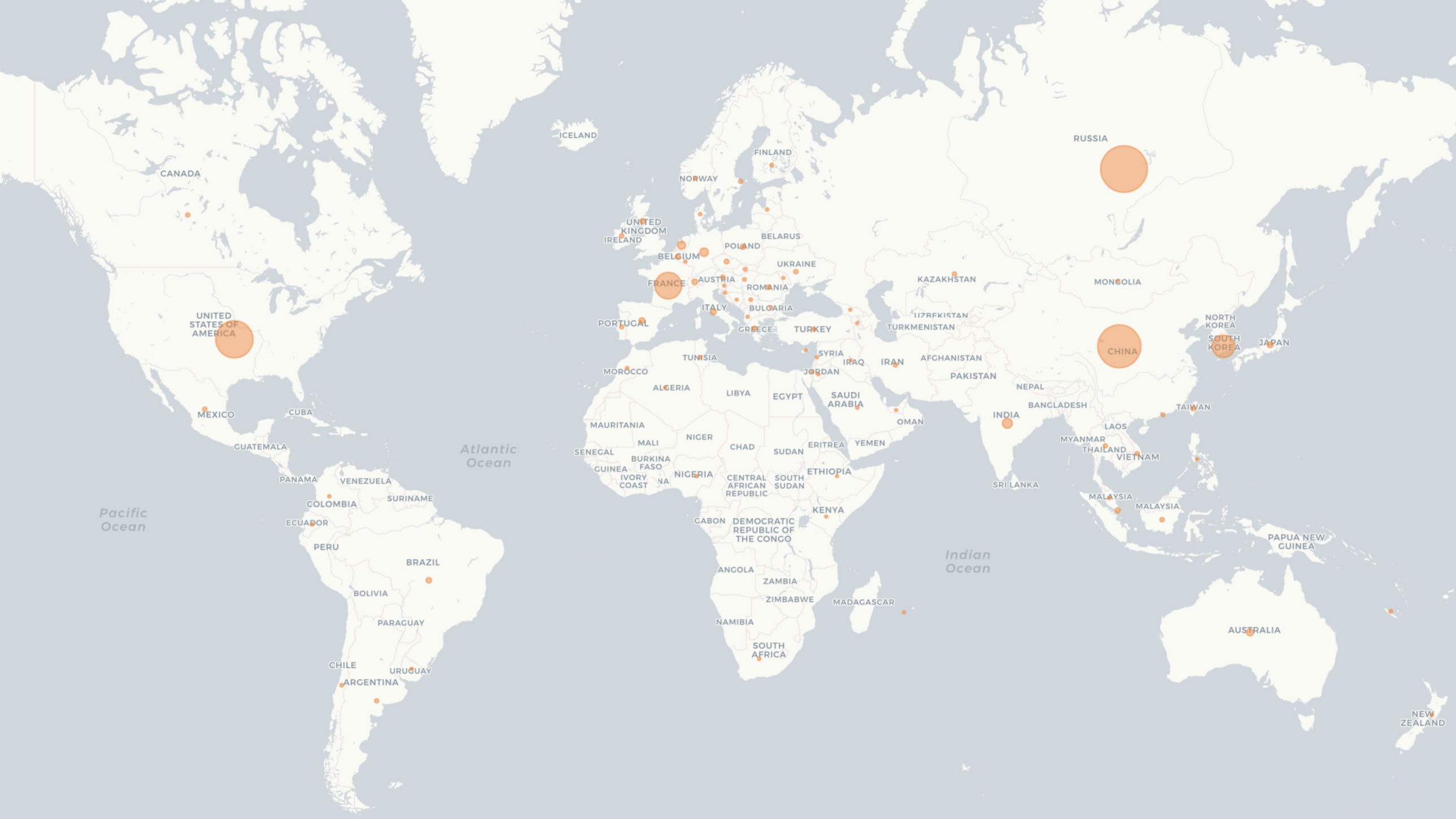
ICELAND
CANADA
FINLAND
NORWAY
RUSSIA
UNITED KINGDOM
IRELAND
BELARUS
POLAND
BELGIUM
UKRAINE
FRANCE
AUSTRIA
ROMANIA
KAZAKHSTAN
MONGOLIA
ITALY
BULGARIA
UNITED STATES OF AMERICA
PORTUGAL
GREECE
TURKEY
UZBEKISTAN
TURKMENISTAN
NORTH KOREA
SOUTH KOREA
JAPAN
CHINA
TUNISIA
SYRIA
IRAQ
IRAN
AFGHANISTAN
MOROCCO
JORDAN
PAKISTAN
ALGERIA
LIBYA
EGYPT
SAUDI ARABIA
NEPAL
BANGLADESH
TAIWAN
MEXICO
CUBA
INDIA
OMAN
MAURITANIA
LAOS
NIGER
MYANMAR
GUATEMALA
MALI
CHAD
ERITREA
YEMEN
THAILAND
VIETNAM
SENEGAL
SUDAN
BURKINA FASO
GUINEA
ETHIOPIA
PANAMA
VENEZUELA
IVORY COAST
NIGERIA
CENTRAL AFRICAN REPUBLIC
SOUTH SUDAN
SRI LANKA
COLOMBIA
SURINAME
MALAYSIA
MALAYSIA
ECUADOR
KENYA
GABON
DEMOCRATIC REPUBLIC OF THE CONGO
PAPUA NEW GUINEA
PERU
BRAZIL
ANGOLA
ZAMBIA
BOLIVIA
ZIMBABWE
MADAGASCAR
PARAGUAY
NAMIBIA
AUSTRALIA
SOUTH AFRICA
CHILE
URUGUAY
ARGENTINA
NEW ZEALAND
Atlantic Ocean
Pacific Ocean
Indian Ocean


ICELAND
CANADA
FINLAND
NORWAY
RUSSIA
UNITED KINGDOM
IRELAND
BELARUS
POLAND
BELGIUM
UKRAINE
FRANCE
AUSTRIA
ROMANIA
KAZAKHSTAN
MONGOLIA
ITALY
BULGARIA
UZBEKISTAN
PORTUGAL
GREECE
TURKEY
TURKMENISTAN
NORTH KOREA
SOUTH KOREA
JAPAN
UNITED STATES OF AMERICA
CHINA
TUNISIA
SYRIA
IRAQ
IRAN
AFGHANISTAN
MOROCCO
JORDAN
PAKISTAN
ALGERIA
LIBYA
EGYPT
SAUDI ARABIA
NEPAL
BANGLADESH
TAIWAN
MEXICO
CUBA
INDIA
OMAN
MAURITANIA
LAOS
MYANMAR
GUATEMALA
MALI
NIGER
CHAD
ERITREA
YEMEN
THAILAND
VIETNAM
SENEGAL
SUDAN
BURKINA FASO
GUINEA
ETHIOPIA
IVORY COAST
NIGERIA
CENTRAL AFRICAN REPUBLIC
SOUTH SUDAN
SRI LANKA
PANAMA
VENEZUELA
MALAYSIA
COLOMBIA
SURINAME
KENYA
ECUADOR
GABON
DEMOCRATIC REPUBLIC OF THE CONGO
PAPUA NEW GUINEA
PERU
BRAZIL
ANGOLA
ZAMBIA
BOLIVIA
ZIMBABWE
MADAGASCAR
PARAGUAY
NAMIBIA
AUSTRALIA
SOUTH AFRICA
CHILE
URUGUAY
ARGENTINA
NEW ZEALAND
Atlantic Ocean
Pacific Ocean
Indian Ocean

Sponsored by

- CableLabs (www.cablelabs.com)
- SIDN Fonds (www.sidnfonds.nl)
- Acklio (www.ackl.io)

Setting up your own network


MULTITECH
MultiConnect Conduit

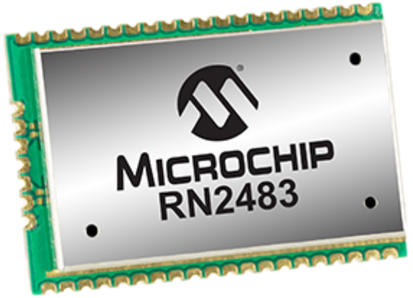
MICROCHIP
RN2483


kerlink
communication is everything

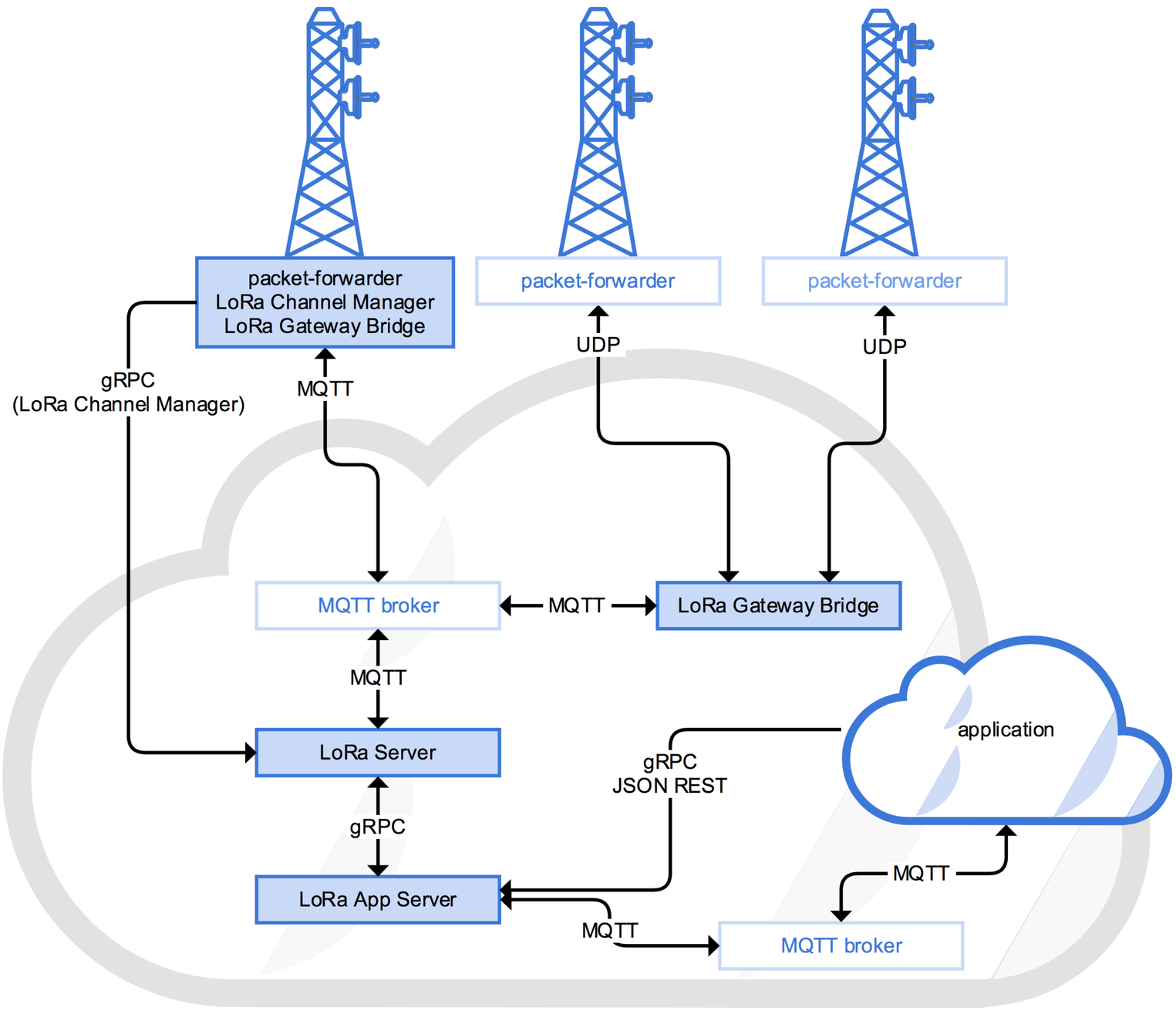
packet-forwarder
LoRa Channel Manager
LoRa Gateway Bridge
packet-forwarder
packet-forwarder
UDP
UDP
gRPC
(LoRa Channel Manager)
MQTT
MQTT broker
MQTT
LoRa Gateway Bridge
MQTT
LoRa Server
application
gRPC
JSON REST
gRPC
LoRa App Server
MQTT
MQTT
MQTT broker

LoRa Gateway Bridge

(gateway connectivity)

LoRa Gateway Bridge

- Semtech packet-forwarder (https://github.com/lora-net/packet_forwarder)
  - Not ideal, but it works
    - JSON over UDP, no authentication, NAT / firewall issues
- LoRa Gateway Bridge (https://docs.loraserver.io/lora-gateway-bridge/)
  - Transform UDP protocol into JSON over MQTT

LoRa Gateway Bridge

- MQTT topics (https://docs.loraserver.io/lora-gateway-bridge/use/data/)
  - gateway/[MAC]/stats
  - gateway/[MAC]/rx
  - gateway/[MAC]/tx
  - gateway/[MAC]/ack
    - TX OK, invalid frequency, scheduling error, etc…

LoRa Gateway Bridge

- Optional Transport Layer Security (TLS)
- Authentication & MQTT authorization
- Installed on the gateway or in the cloud
  - It can handle multiple gateways (and packet-forwarder protocols) simultaneously
- Can be used without LoRa Server (e.g. debugging)

LoRa Channel Manager

(gateway channel-plan utility)

LoRa Channel Manager

- Centralize gateway channel-configuration
- Fetches channel-configuration from LoRa Server
- Writes packet-forwarder configuration
- Restarts packet-forwarder
- Periodical update check

- Optional component, not required

LoRa Server

(network-server)

LoRa Server

- Responsible for the state of the network
  - Frequencies, TX timing, data-rate, TX power, … of devices
- Handles de-duplication, integrity and frame-counter checks
- Responsible for downlink scheduling
  - Class-A —> after an uplink
  - Class B —> on GPS synchronized intervals
  - Class C —> immediately

LoRa App Server

(application-server & default join-server)

LoRa App Server

- Manages:
  - (Per organization) application and device inventory
  - Application integrations (default JSON over MQTT + HTTP)
  - Payload decoding & encoding (Cayenne LPP & custom JS)

- Web-interface
- RESTFul JSON API + gRPC API

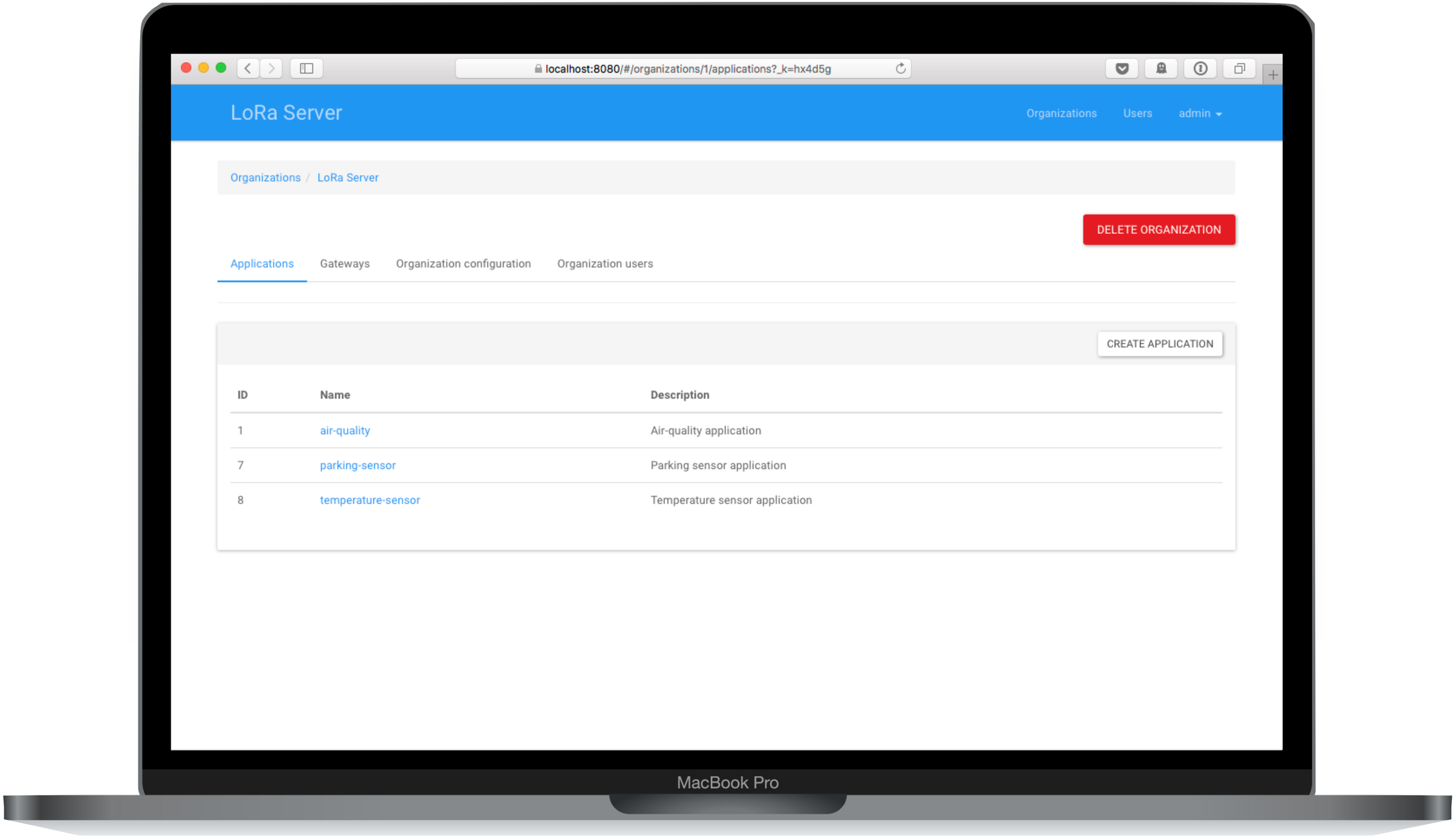
localhost:8080/#/organizations/1/applications?_k=hx4d5g
LoRa Server
Organizations
Users
admin
Organizations / LoRa Server
DELETE ORGANIZATION
Applications
Gateways
Organization configuration
Organization users
CREATE APPLICATION
ID
Name
Description
1
air-quality
Air-quality application
7
parking-sensor
Parking sensor application
8
temperature-sensor
Temperature sensor application
MacBook Pro

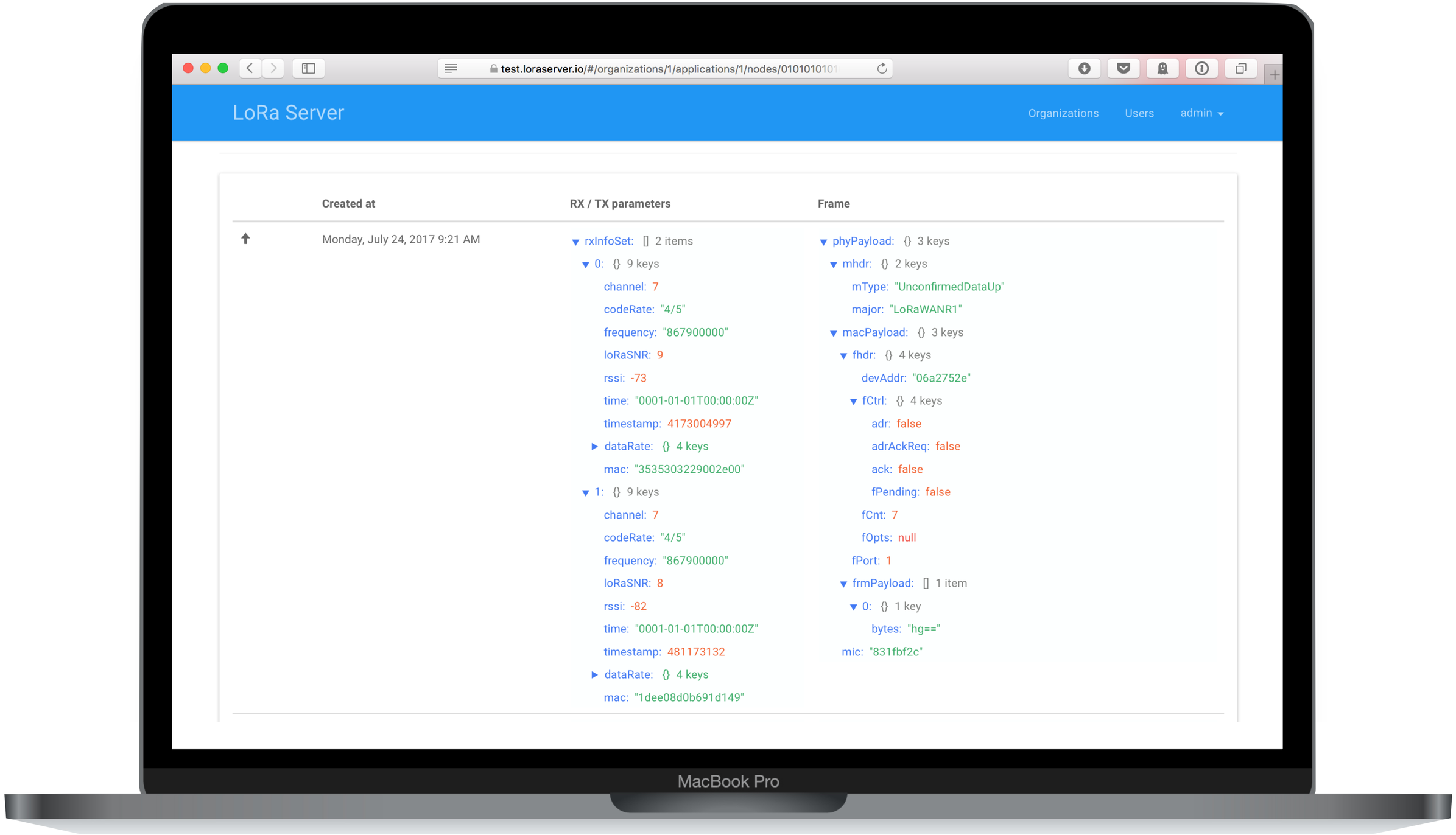
test.loraserver.io/#/organizations/1/applications/1/nodes/0101010101
LoRa Server
Organizations
Users
admin
Created at
RX / TX parameters
Frame
Monday, July 24, 2017 9:21 AM
rxInfoSet: [] 2 items
0: {} 9 keys
channel: 7
codeRate: "4/5"
frequency: "867900000"
loRaSNR: 9
rssi: -73
time: "0001-01-01T00:00:00Z"
timestamp: 4173004997
dataRate: {} 4 keys
mac: "3535303229002e00"
1: {} 9 keys
channel: 7
codeRate: "4/5"
frequency: "867900000"
loRaSNR: 8
rssi: -82
time: "0001-01-01T00:00:00Z"
timestamp: 481173132
dataRate: {} 4 keys
mac: "1dee08d0b691d149"
phyPayload: {} 3 keys
mhdr: {} 2 keys
mType: "UnconfirmedDataUp"
major: "LoRaWANR1"
macPayload: {} 3 keys
fhdr: {} 4 keys
devAddr: "06a2752e"
fCtrl: {} 4 keys
adr: false
adrAckReq: false
ack: false
fPending: false
fCnt: 7
fOpts: null
fPort: 1
frmPayload: [] 1 item
0: {} 1 key
bytes: "hg=="
mic: "831fbf2c"
MacBook Pro

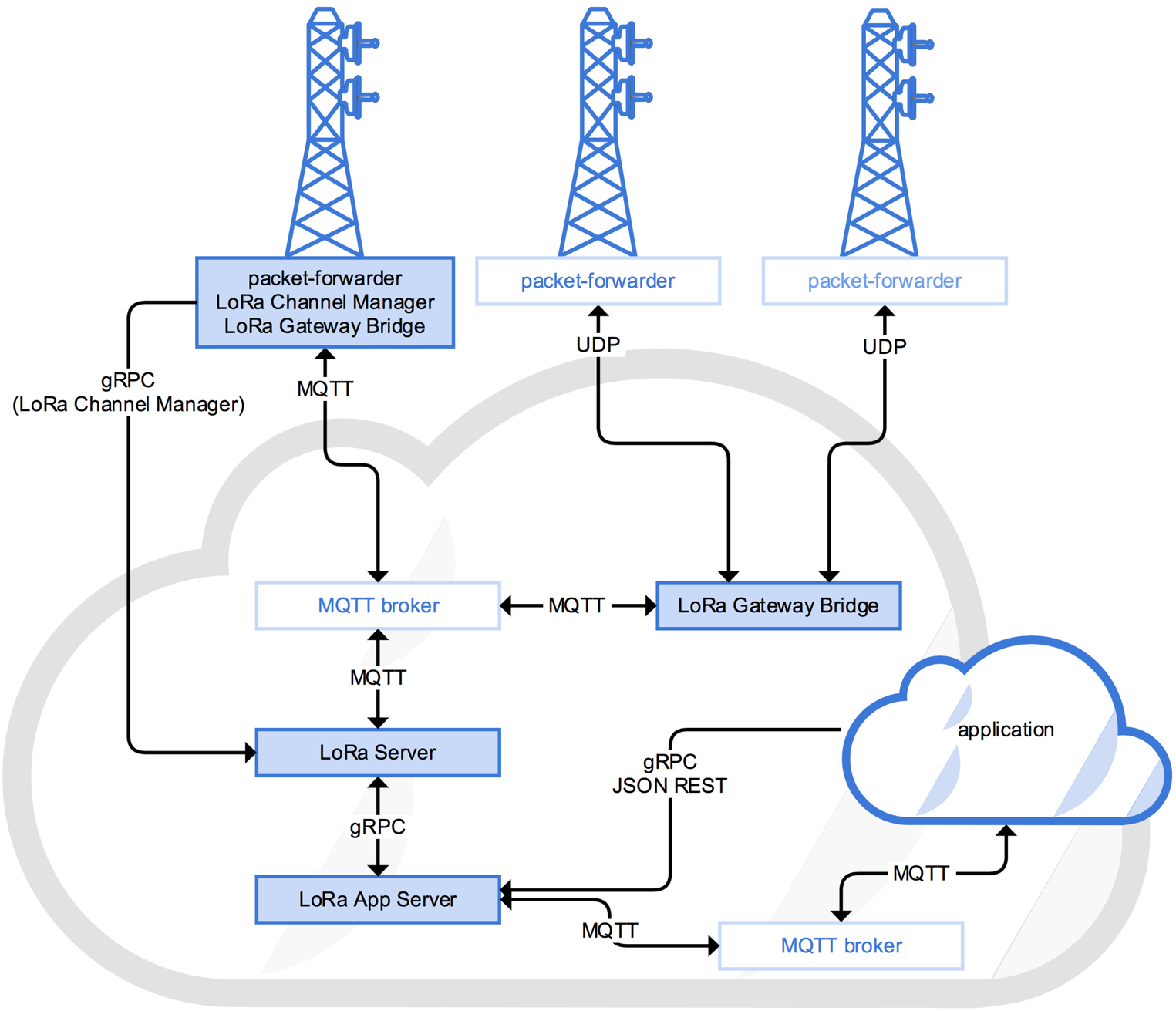
packet-forwarder
LoRa Channel Manager
LoRa Gateway Bridge
packet-forwarder
packet-forwarder
UDP
UDP
gRPC
(LoRa Channel Manager)
MQTT
MQTT broker
MQTT
LoRa Gateway Bridge
MQTT
LoRa Server
application
gRPC
JSON REST
gRPC
LoRa App Server
MQTT
MQTT
MQTT broker

Roadmap

- Class-B
- Passive roaming support (works with LoRaWAN 1.0.2)
- LoRaWAN 1.1 support
- Active roaming support (requires LoRaWAN 1.1)
- More integrations

- What do you need?

Where do I start?

- https://docs.loraserver.io
  - Source, binaries, Debian & Ubuntu packages
  - Docker images (+ docker-compose ready to go example!)

- https://forum.loraserver.io
  - Community support forum

Why should I use it?

- Full visibility of data-flow and event
- Completely open-source (MIT)
- Easy to get started
- Mix and match components
  - Keeping LoRa Server as the network-server core

Questions?

Orne Brocaar
info@brocaar.com - www.brocaar.com - www.loraserver.io